# Adding the Envelope Generator Response Mod to the SN-Voice

A 10K pot is added to control EG Response

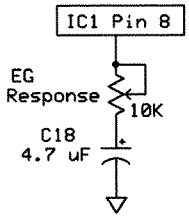


Increased resistance produces a sharper response.
Decreased resistance produces the standard response.

The EG Response Mod can be used in conjunction with the EG Gated Mod.

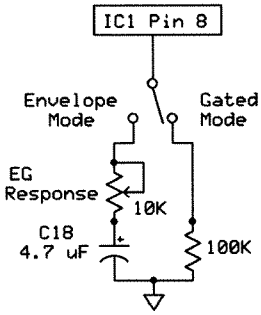


If the C&K 7211 Switch is used, it would be wired like this.

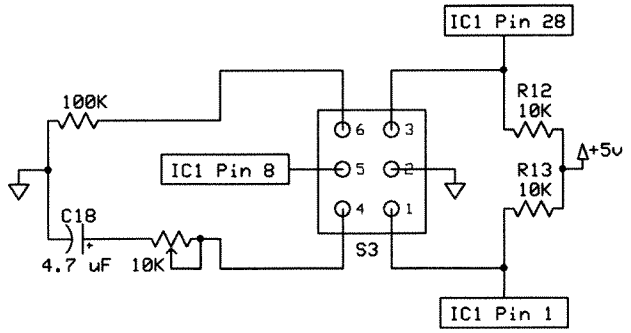


Copyright (c) 2006 Scott Stites